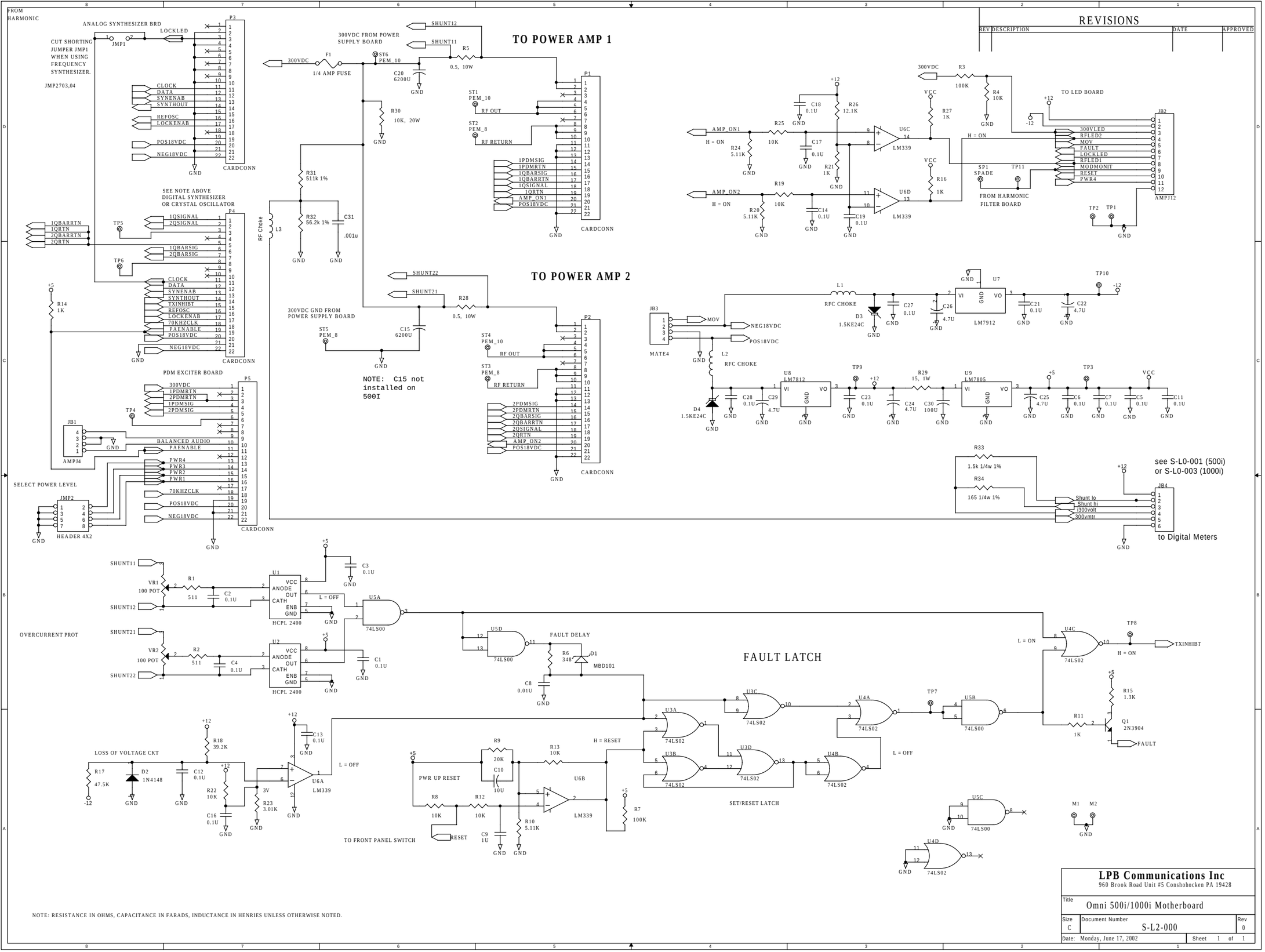

REVISIONS

REV	DESCRIPTION	DATE	APPROVED

NOTE: RESISTANCE IN OHMS, CAPACITANCE IN FARADS, INDUCTANCE IN HENRIES UNLESS OTHERWISE NOTED.

LPB Communications Inc
960 Brook Road Unit #5 Conshohocken PA 19428

Title: Omni 500i/1000i Motherboard

Size: C | Document Number: S-L2-000 | Rev: 0

Date: Monday, June 17, 2002 | Sheet 1 of 1